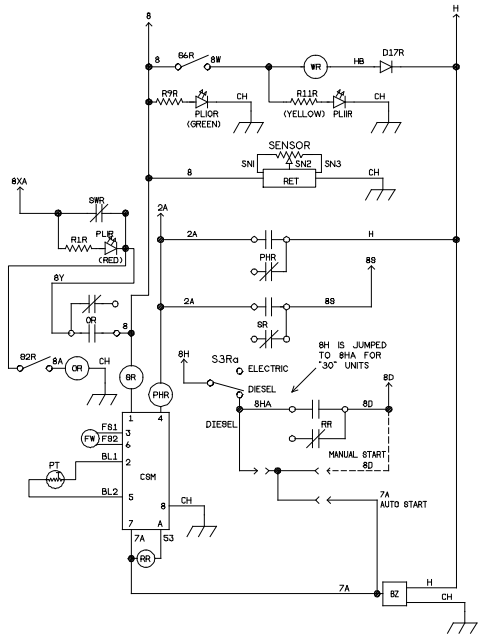

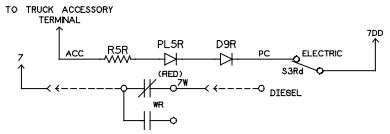

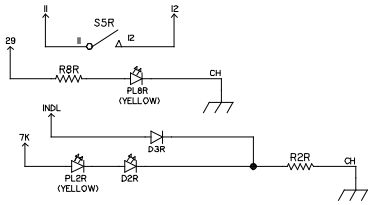

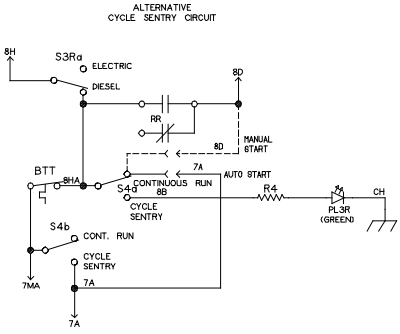

LEGEND

BTT	BLOCK TEMPERATURE SWITCH (CYCLE SENTRY ONLY)	31
BZ	BUZZER	18
C8M	CYCLE SENTRY MODULE	15
D2R	DIODE, 1N4002	25
D3R	DIODE, 1N4002	25
D9R	DIODE, 1N4002	28
D17R	DIODE, 1N5406	6
FW	FLYWHEEL RPM SENSOR	14
OR	ON RELAY, SPDT	12,13
PHR	PREHEAT RELAY, SPDT	18,13
PL	PILOT LIGHTS (R - REMOTE)	
	1R - UNIT SHUTDOWN (RED)	18
	2R - ALTERNATOR FAULT (YEL)	25
	3R - CYCLE SENTRY MODE (GRN)	31
	5R - POWER CORD WARNING (RED)	28
	8R - DEFROST MODE (YEL)	24
	10R - UNIT ON (GRN)	7
	11R - WHISPER MODE (YEL)	7
PT	PREHEAT THERMISTOR	15
RET	REMOTE ELECTRONIC THERMOMETER	9
RR	RUN RELAY, SPDT	14,17
R	RESISTORS (R - REMOTE)	
	1R - 1.8K, 1/2 W	18
	2R - 1.8K, 1/2 W	25
	4 - 1K, 1/2 W	31
	5R - 1.8K, 1/2 W	28
	8R - 1.8K, 1/2 W	24
	9R - 1.8K, 1/2 W	7
	11R - 1.8K, 1/2 W	7
SR	STARTER RELAY, SPDT	12,13
SWR	SAFETY SWITCH RELAY	9
S	SWITCHES (R - REMOTE)	
	2R - ON/OFF, SPST	13
	3Ra, d - DIESEL/ELECTRIC, 4PDT	13,20,29
	4a, b - CONTINUOUS RUN/ CYCLE SENTRY, DPDT	31,33
	5R - MANUAL DEFROST, SPST MOMENTARY	23
	6R - WHISPER, SPST	6
WR	WHISPER RELAY, SPDT	4,21

ONLY CIRCUITRY DIRECTLY INVOLVING CAB CONTROL IS SHOWN ON THIS DIAGRAM.

THERMO KING CORPORATION
MINNEAPOLIS, MINNESOTA, U.S.A.

DRAWING NUMBER: 5D41583 REV: A

DIAGRAM SCHEMATIC
CAB CONTROL W/O
THERMOSTAT
MDKDRDTD

SHEET 1 OF 1

DRAWN: JAS DATE: 10/13/93
CHECKED
APPROVED
APPROVED
SCALE: BRAVO_DD

THERMO KING PROPRIETARY DATA.
THE ACCURACY OF THIS THE PROPRIETARY DATA, DESIGN, AND CONTENTS IS NOT TO BE REVEALED OR PUBLISHED TO A THIRD PARTY. THIS IS THE PROPERTY OF THERMO KING CORPORATION AND IS NOT TO BE USED OR REPRODUCED WITHOUT WRITTEN PERMISSION OF THERMO KING CORPORATION.
© THERMO KING CORPORATION

REVISIONS

62381	JAS	10/13/93	A

RELEASED

04/24/96 10:36