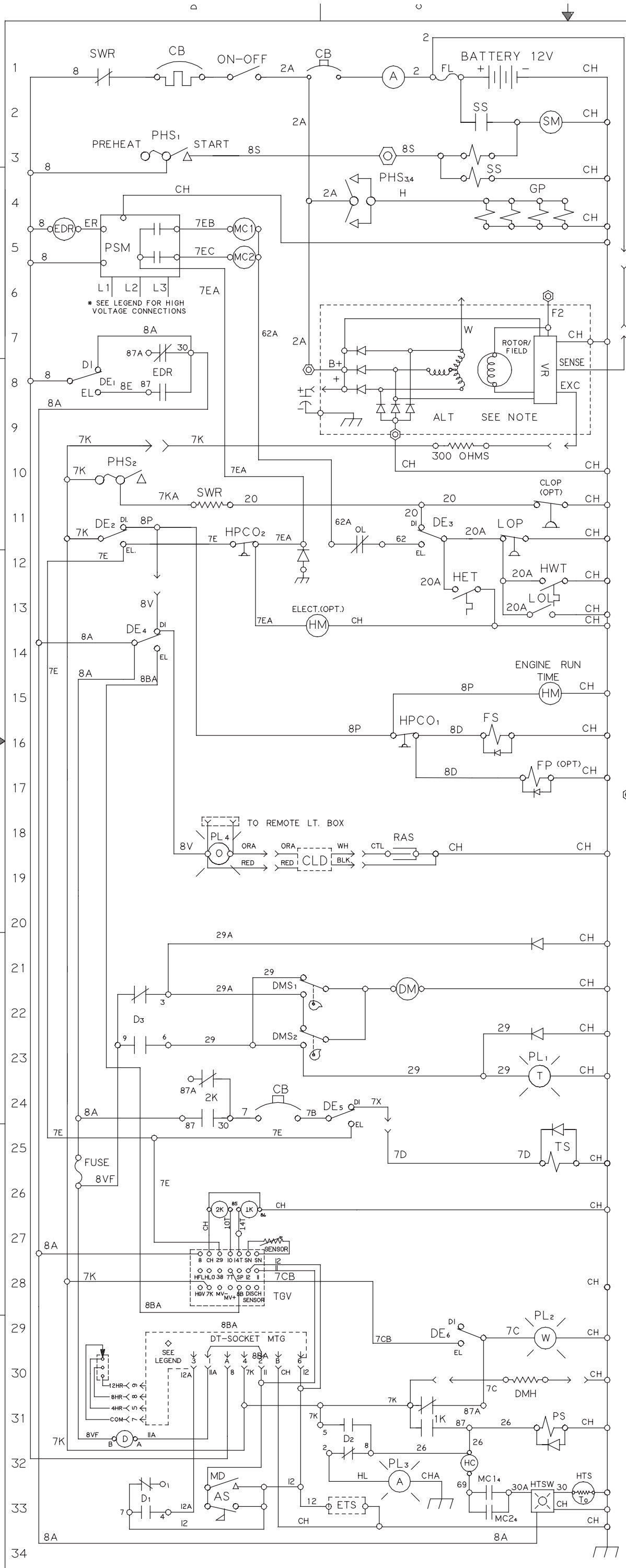

LEGEND		AREA
A	AMMETER	1
ALT	ALTERNATOR	8
AS	AIR SWITCH	33
CB	CIRCUIT BREAKER	1,1,24
CLD	COOLANT LEVEL DETECTOR	19
CLOP	COMPRESSOR LOW OIL PRESSURE SWITCH (OPTIONAL)	11
$D_{1,2,3}$	DEFROST RELAY	22,32,(32),33
DM	DAMPER MOTOR	21
DMH	DAMPER MOTOR HEATER	30
$DMS_{1,2}$	DAMPER MOTOR SWITCH	21,22
$DE_{1,2,3,4,5,6}$	DIESEL ELECT. SW.	8,11,11,13,24,29
DT	DEFROST TIMER MODULE	30
EDR	ELECTRIC DISCONNECT RELAY	(4),8
ETS	ELECTRONIC DEF. TERM.SW.	33
FL	FUSIBLE LINK	1
FP	FUEL PUMP (OPTIONAL)	17
FS	FUEL SOLENOID	16
FUSE		25
GP	GLOW PLUGS	4
HC	HEATER CONTACTOR EVAP.	24,(32)
HET	EVAP. HIGH TEMP. SW.	13
HM	HOURMETER	13,15
$HPCO_{1,2}$	HIGH PRESSURE CUTOUT SW.	11,16
HTS	HIGH TEMP. SENSOR	33
HTSW	HIGH TEMP. SWITCH	33
HWT	HIGH WATER TEMP. SW.	13
LOL	LOW OIL LEVEL SWITCH	13
LOP	LOW OIL PRESSURE SW.	12
MC1	MOTOR CONTACTOR	(5),21,33
MC2	MOTOR CONTACTOR	(5),21,33
MD	MANUAL DEFROST	32
OL	OVERLOAD RELAY	12
ON-OFF	ON-OFF SWITCH	
$PHS_{1,2,3,4}$	PREHEAT START SW.	3,4,10
PL	PILOT LIGHTS	
	1. T (TAN) DEFROST	23
	2. W (WHITE) COOL	29
	3. A (AMBER) HEAT	32
	4. O (ORANGE) COOLANT LEVEL	18
PS	PILOT SOLENOID	31
PSM	PHASE SENSING MODULE	5
RAS	RADIATOR SENSOR	19
SM	STARTER MOTOR	2
SS	STARTER SOLENOID	2,3
SWR	SWITCH RESET	1,11
TG-V	THERMOGUARD - V	
	1K - HEAT RELAY	(26),31
	2K - SPEED RELAY	24,(26)
TCM	TEMP CONTROL MODULE	28
TS	THROTTLE SOLENOID	25
VR	VOLTAGE REGULATOR (INTERNAL)	8

THERMOGAURD V
PROGRAMMING SET UP CODES

LEFT DIGIT	RIGHT DIGIT	SCREEN
3	9	1
2	5	2
0	0	3
0	0	4
0	0	5

◇ DEFROST TIMER CAN NOT BE USED WITH TGV

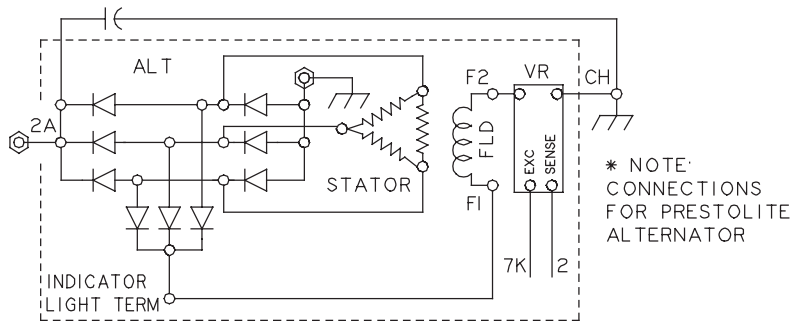

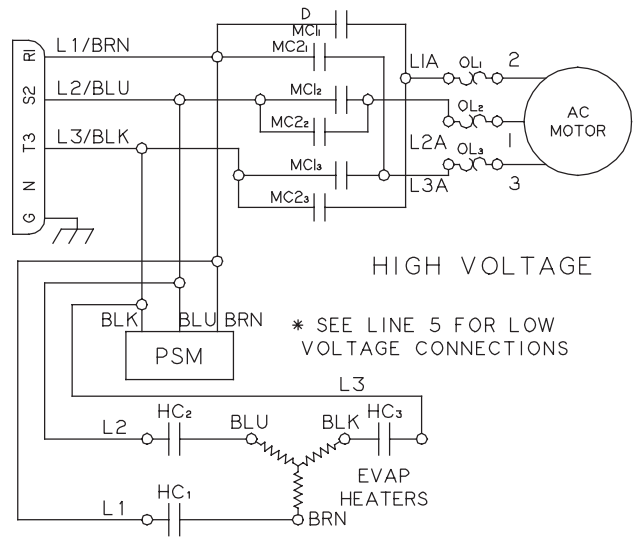

THERMOSTAT SWITCH SEQUENCE
S2 SW. IN CYCLE POSITION

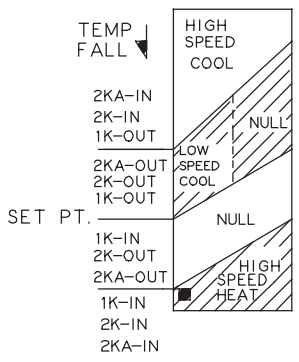

▲ —BELOW DIAL SETTINGS OF 15°F HIGH SPEED HEAT IS LOCKED OUT

■ —BELOW DIAL SETTINGS OF 15°F ALL HEAT IS LOCKED OUT

THERMOSTAT SWITCH SEQUENCE
S2 SW IN CONTINUOUS RUN POSITION

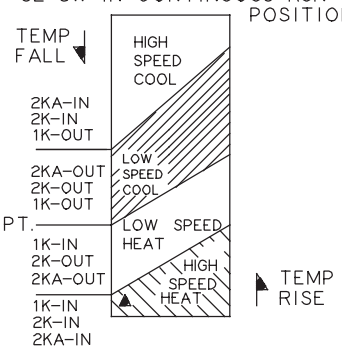

THERMOSTAT SWITCH SEQUENCE
D-E SW. IN ELECT. POSITION

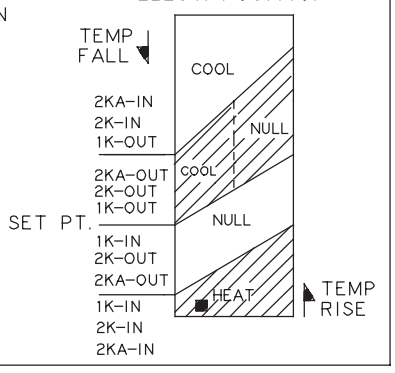

THERMO KING CORPORATION MINNEAPOLIS, MINNESOTA, USA

REF: 5D37342

DRAWING NUMBER 5D37341 REV F

SCHEMATIC DIAG. SMX 50 W/ PHASE CORRECTION TGV

SCALE

		DATE
DRAWN	JDC	12/19/91
CHECKED	JDC	12/19/91
APPROVED	JP	1/24/92
APPROVED		

THIS PRINT SUPERSEDES ANY OF EARLIER DATE BEARING SAME

FOR TOLERANCES NOT SPECIFIED SEE TKS09-109 TKS09-110

LIMITS NOT ACCUMULATIVE OVER A CONTINUOUS LINE OF DIMENSIONS. DESIGN DIMENSIONS ARE IN INCHES MILLIMETERS ARE EQUIVALENTS

FINISH

REVISIONS

71332	5/3/93	ES		E
ADDED DISCONNECT BETWEEN DMH & GND				
65767	3/27/95	FJ		F
REV HIGH VOLT WIRE CODES				