Circuit diagram PW start (standard motor)

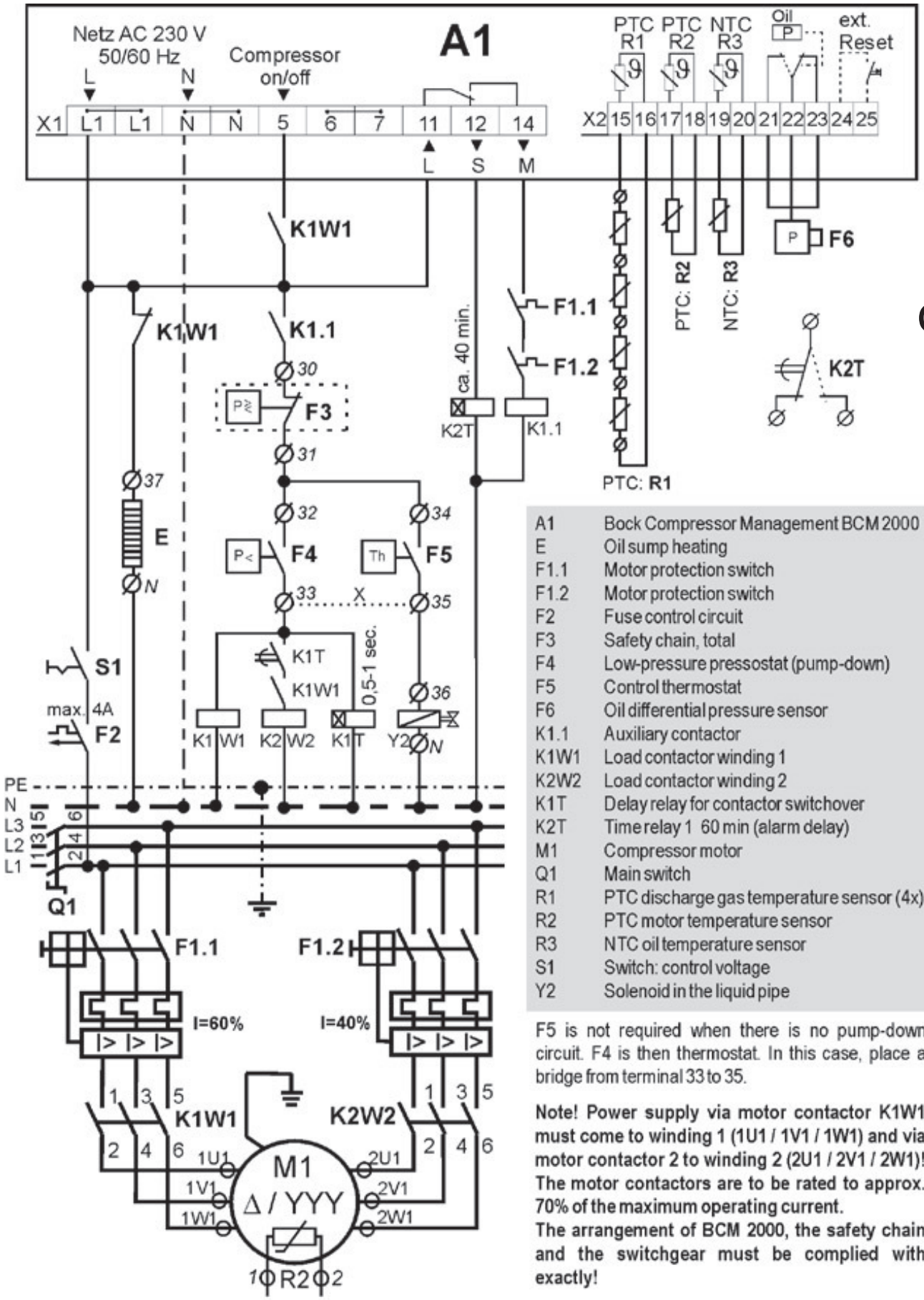

A1	Bock Compressor Management BCM 2000
E	Oil sump heating
F1.1	Motor protection switch
F1.2	Motor protection switch
F2	Fuse control circuit
F3	Safety chain, total
F4	Low-pressure pressostat (pump-down)
F5	Control thermostat
F6	Oil differential pressure sensor
K1.1	Auxiliary contactor
K1W1	Load contactor winding 1
K2W2	Load contactor winding 2
K1T	Delay relay for contactor switchover
K2T	Time relay 1 60 min (alarm delay)
M1	Compressor motor
Q1	Main switch
R1	PTC discharge gas temperature sensor (4x)
R2	PTC motor temperature sensor
R3	NTC oil temperature sensor
S1	Switch: control voltage
Y2	Solenoid in the liquid pipe

F5 is not required when there is no pump-down circuit. F4 is then thermostat. In this case, place a bridge from terminal 33 to 35.

Note! Power supply via motor contactor K1W1 must come to winding 1 (1U1 / 1V1 / 1W1) and via motor contactor 2 to winding 2 (2U1 / 2V1 / 2W1)! The motor contactors are to be rated to approx. 70% of the maximum operating current.
The arrangement of BCM 2000, the safety chain and the switchgear must be complied with exactly!

GB

09790-01.03-DGbFEI